:FABBIAN

XY&Z F63

F63L01A02

Gensler

Fixture type

Project name



Dimensions

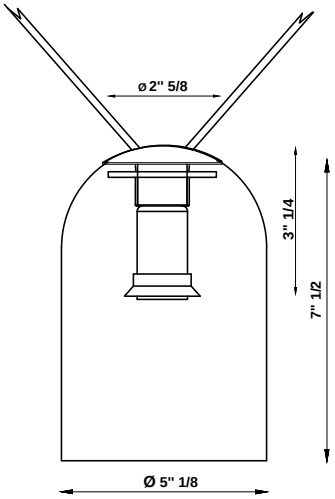

Material

Hand blown glass

Color

Clear

Other colors available

Check online www.fabbian.us

Included accessories

Clear external glass diffuser

Not included accessories

F63V Interal Glass, F63M Canopy, Lamp

Notes

Component only for use with XY&Z F63 pendant system. Reference fabbian.us/group/xyz-f63/ for full list of components.

Description

E12 pendant light module with external glass component. Includes 15 feet of black cord, clear hand blown glass external diffuser, and E12 base lamp holder.

Voltage	Dimmable
120V	Lamp dependent

Specs

Intertek DRY

Light source and Technical

Lamp type: 1 x 12W Max LED
Wattage: 12W LED
Lumens: Lamp dependent

Pictures, descriptions, dimensions and technical data have to be considered as purely indicative. While maintaining the basic characteristics of the product, the manufacturer reserves the right to make modifications at any time with the sole aim of improvement.