:FABBIAN

XY&Z F63

F63L05A02

Gensler

Fixture type

Project name



Description

LED pendant light module with external glass component. Includes 15 feet of black cord, clear hand blown glass external diffuser, and 4000K LED module.

Voltage	Dimmable
24V	Driver dependant

Light source and Technical

Lamp type: LED 1 x 6W
Wattage: 6W
Color temperature: 4000K
CRI: 90+

Dimensions

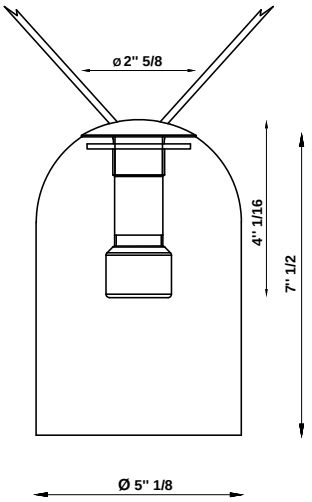

Material

Hand blown glass

Color

Clear

Other colors available

Check online www.fabbian.us

Included accessories

LED module, clear external glass diffuser

Not included accessories

F63V Interal Glass, F63M Canopy, Remote Driver

Notes

Component only for use with XY&Z F63 pendant system. Reference fabbian.us/group/xyz-f63/ for full list of components.

Pictures, descriptions, dimensions and technical data have to be considered as purely indicative. While maintaining the basic characteristics of the product, the manufacturer reserves the right to make modifications at any time with the sole aim of improvement.