:FABBIAN

Ari F55

A55208

Fixture type

Project name

Material

Electronic Driver

Not included accessories

LED Pendant, Canopy/Junction box cover



Description

60W 24V Class 2 Remote-Mount. Fits inside of 4x4 J-Box.

Voltage	Dimmable
120V	ELV

Light source and Technical

Lamp type: LED Driver
Wattage: 60W

Pictures, descriptions, dimensions and technical data have to be considered as purely indicative. While maintaining the basic characteristics of the product, the manufacturer reserves the right to make modifications at any time with the sole aim of improvement.

Fabbian

60W 24V DC
A55208

No Load Technology, Optimized for Low Voltage LED & Halogen Bulbs!**

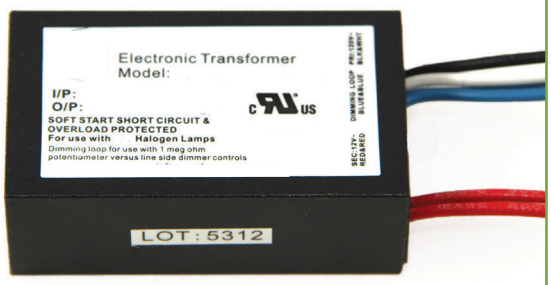

Efficiency	higher than 85%
Power Factor	>98%
Case TC*	90C° Max
Protection	Input/ Output
Storage	-30°C/ +90C°
Humidity	95% RH max
IP Rating	IP 60
Standard Dimming	ELV Dimmable
Special Dimming	Dimming Loop (DL)
Special Dimming	0-10V Dimming (D10)
Class	Class 2

RoHS

3 5* Year Warranty

Features

- No load technology, works with both Halogen & LED AC loads **
- Isolated output power per NEC and UL safety requirements
- UL recognized/listed Class 2 power supply, meet UL 2108 requirements
- Auto-reset; Short circuit, Overload and Thermal protection
- Soft start
- Dimmable and available with special dimming features
- Low profile, small compact design to fit in most enclosures

Wire derating guide for 24V for distance to driver

Gauge	Distance
18AWG	25 feet
16AWG	40 feet
14AWG	60 feet
12AWG	100 feet
10AWG	150 feet

Electrical Specifications

120V					
Model #	**Input Voltage**	**Input Current**	**Output Voltage**	**Weight**	**Load Type**
A55208	120V AC /60Hz	0.5 A	24V DC	160g	LED Strips, LED Bulbs, Incandescent & Halogen Bulbs

Mechanical Specs. for All DC Products

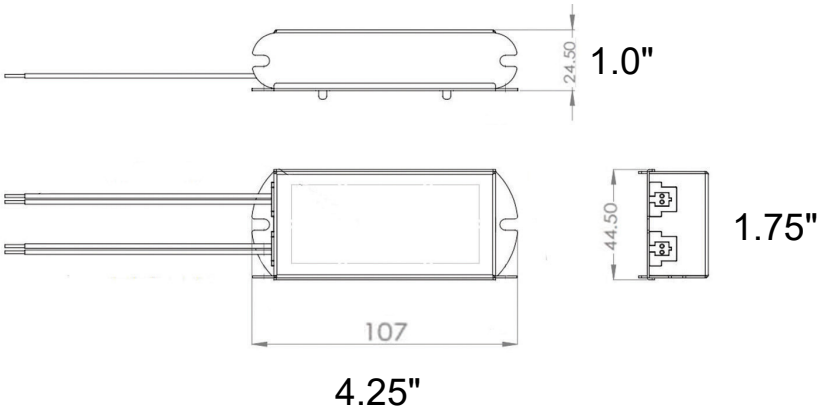

Available Form Factors	Dimensions
Standard "E"	107X44.5X24.5mm

*Under confirmed thermal condition **Only true for model #'s with "LED" sufix

Low Voltage Electronic Power Supply - 60W 24V