:FABBIAN

# Ari F55

## A55210

Fixture type

Project name



**Material**

Electronic Driver

**Not included accessories**

LED Pendant, Canopy/Junction box cover

**Description**

96W, 24V, 120-277V (UNV), 0-10V Dimming

| Voltage | Dimmable |
| --- | --- |
| 120-277V (UNV) | 0-10V |

**Light source and Technical**

**Lamp type**: LED Driver
**Wattage**: 96W


Pictures, descriptions, dimensions and technical data have to be considered as purely indicative. While maintaining the basic characteristics of the product, the manufacturer reserves the right to make modifications at any time with the sole aim of improvement.

:Fabbian

# Product Specifications

| High Power LED Driver | |
|---|---|
| Total Power | 100 Watts max. |
| Input Voltages | 110 ~ 277VAC |
| Number of Outputs | One |

## SPECIAL FEATURES

- Universal input range from 100VAC~304VAC, 50/60Hz
- Versatile mechanical design maximizes design flexibility.
- Dimensions, refer to drawings (various styles of mech. Cases)
- Fully potted, suitable for dry and damp location applications
- 3 in 1 Dimming Control plus “ENABLE”, low dim “ON”.
- UL Listed with HL and CE compliant
- Wide selection of pre-adjusted CC and CV outputs (factory setting)



## ENVIRONMENTAL

Operating temperature: -40 to +50 ° C, Tc: 85 ° C
Storage temperature: -40 to +85 ° C
Humidity (Non-Condensing): 5% to 95%
Cooling: Convection
Vibration Frequency: 5 to 50 Hz
MTBF: >100,000 Hours at full load and 25ºC ambient conditions (TELC3 – Telcordia SR-332, Issue 3)

## SPECIFICATIONS :

| | |
|---|---|
| Input Range : 110 ~ 277VAC | Frequency : 47 to 63Hz |
| Power Factor: > 0.92 at 65% to 100% load, 115VAC or 230VAC | Inrush Current : 10.0 Amps max. at 230VAC, cold start 25°C |
| Input Current : 1.1 Amps max. at 115VAC | Efficiency : 87% Typical |
| Output Current Regulation : ±5% | Maximum Power : 100 W |
| Protection : OCP, SCP, OLP – Auto Recovery | Leakage Current : 3mA typ. |
| Control : 0-10V dimmer; PWM (250-3KHz); Potentiometer; Enable | Dimension: 278 x 64 x 42 mm (10.92"L x 2.52"W x 1.65"H ) |
| Hold up time: Half cycle min. at 120VAC and 80% rated load | Regulation Compliance: UL8750 or EN61347, EN55015, EN61547 |

## Model Selection Table – CV model: Q2-Uxx-zz ; CC model: Q-Uxx-Cyyyy-zz

| Model No. | Input | | | Output | | | | | | Class 2 |
|---|---|---|---|---|---|---|---|---|---|---|
| | Voltage (VAC) | Freq (HZ) | Current (A) | Power (W) | Voltage (Vdc) | | | Current (mA) | | Yes/No |
| | | | | Max. | Min. | Nom. | Max. | Min. | Max. | |
| **A55210** | 110~277Vac | 50/60 | 1.10~0.43 | **100** | 15 | 24 | 27 | 1900 | 5000 | YES |

## Wire Derating Guide– for 24V for distance to driver

| Gauge | Distance |
|---|---|
| **18 AWG** | 25 feet |
| **16 AWG** | 40 feet |
| **14 AWG** | 60 feet |
| **12 AWG** | 100 feet |
| **10 AWG** | 150 feet |

## Dimming Wiring Diagram (Standard: "low dim on"; "low dim off" is available upon request)

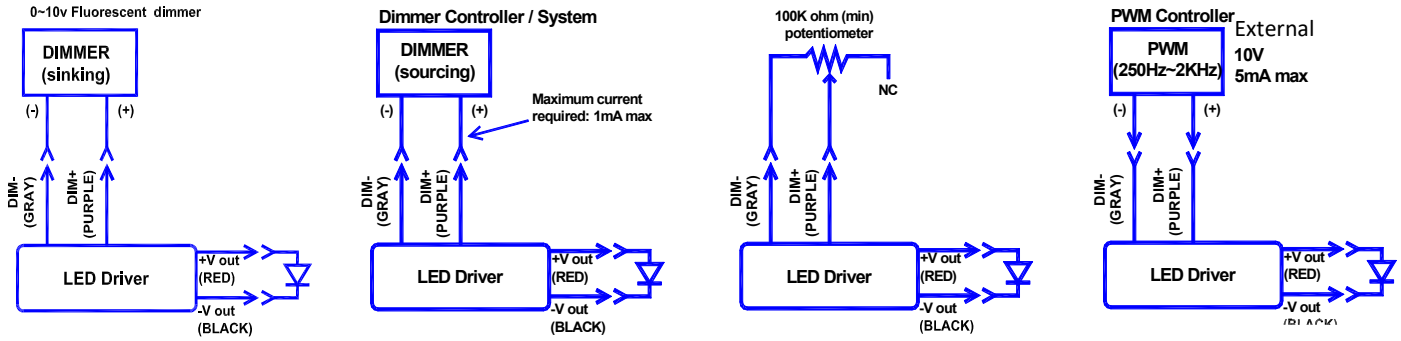


## De-rating Temp. vs. Load

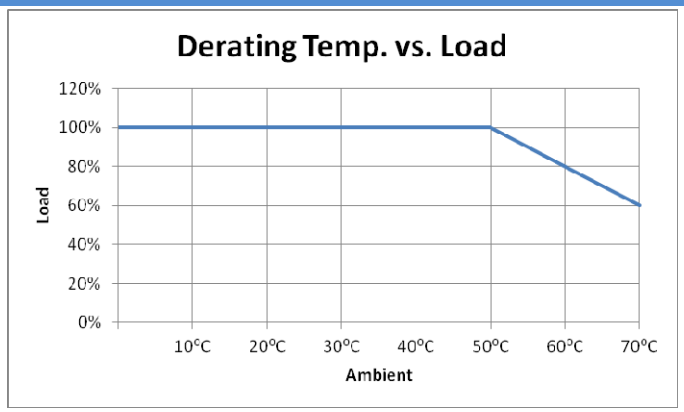


## Constant Power Output Voltage vs. Current

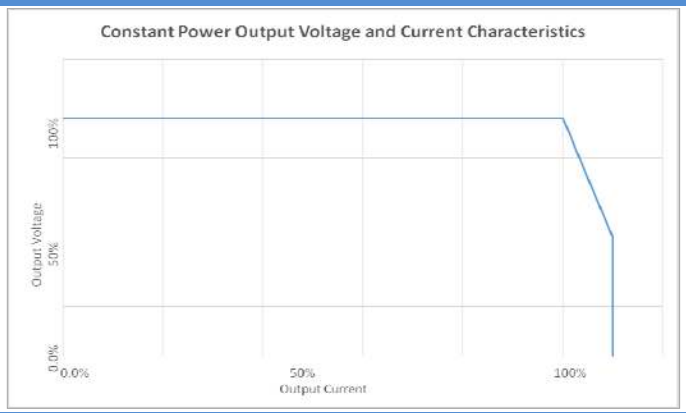


## PWM Dmming Curve

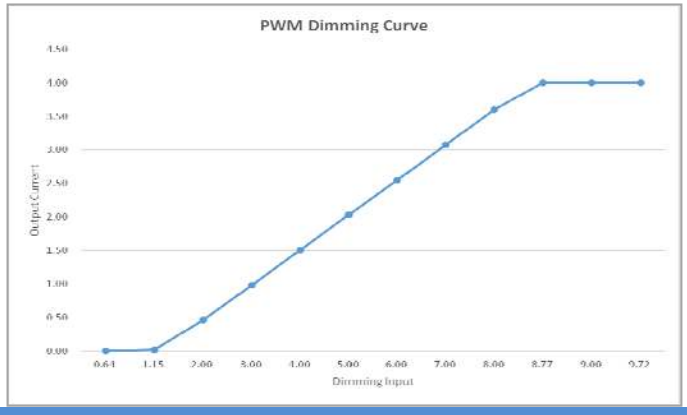


## 1-10V Dimming Curve

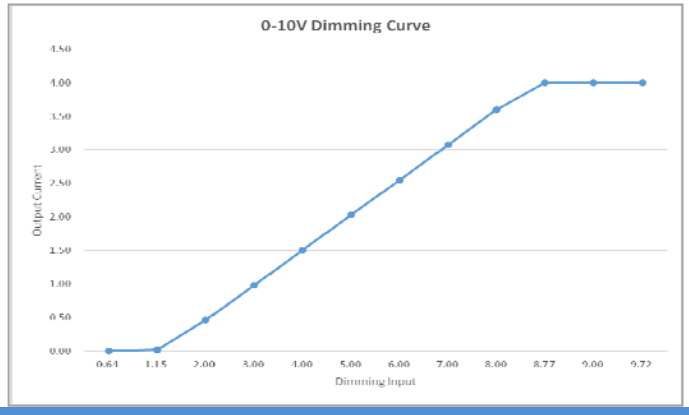


## MECHANICAL SPECIFICATION : Fabbian A55210

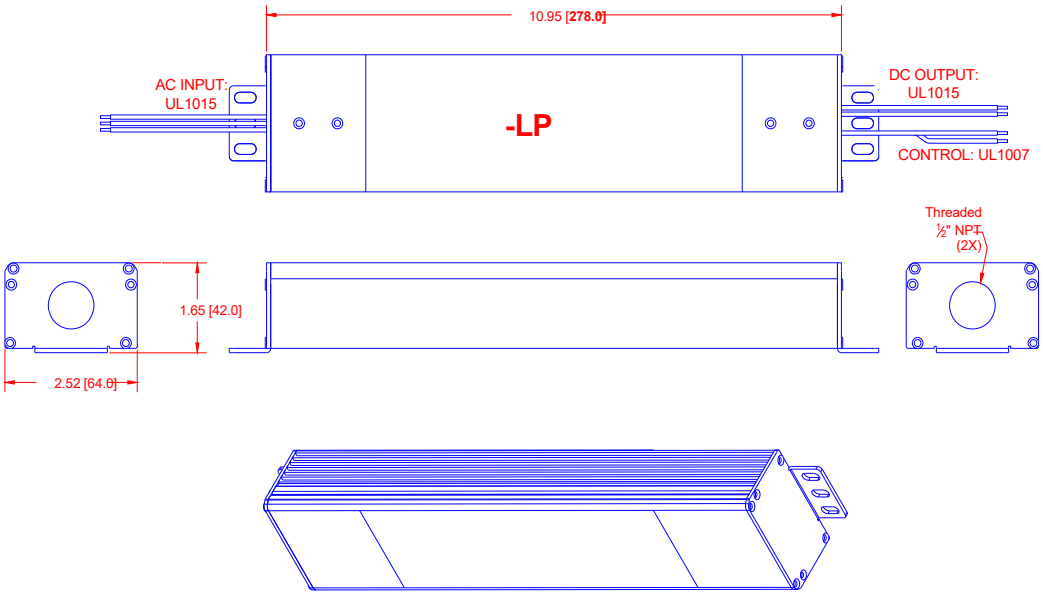


-LP: 10.94 (L) x 2.52 (W) x 1.65 (H) in.
278 x 64 x 42 mm
UL Listed