:FABBIAN

# Santo F74

## F74A21A01

*Atelier Biagetti*

Fixture type

Project name

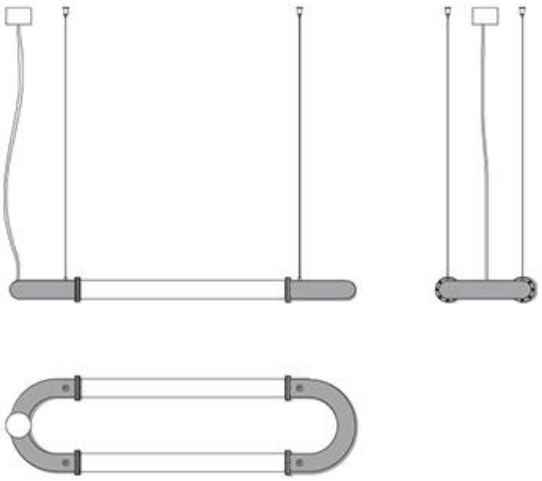

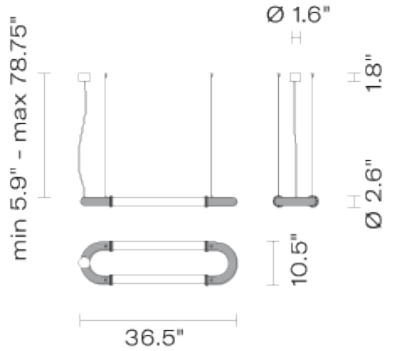


**Dimensions**

**Material**

Blown glass, aluminum

**Color**

White

**Other colors available**

Check online www.fabbian.us

**Included accessories**

LED

**Not included accessories**

Remote dimmable electronic driver

**Weight Lamp**

9.9 lbs

**Options**

2400K, 3500K, and 4000K

**Description**

Linear link-shaped pendants with blown glass diffusers and painted aluminum finish. Provides direct and indirect ambient illumination.

| Voltage | Dimmable |
|---|---|
| 24V | Based on selected driver |

**Specs**

**Light source and Technical**

**Lamp type**: 28W LED
**Wattage**: 28W
**Color temperature**: 3000K
**CRI**: 90+
**Lumens**: 2100lm


Pictures, descriptions, dimensions and technical data have to be considered as purely indicative. While maintaining the basic characteristics of the product, the manufacturer reserves the right to make modifications at any time with the sole aim of improvement.