:FABBIAN

Santo F74

F74A21A79

Atelier Biagetti

Fixture type

Project name

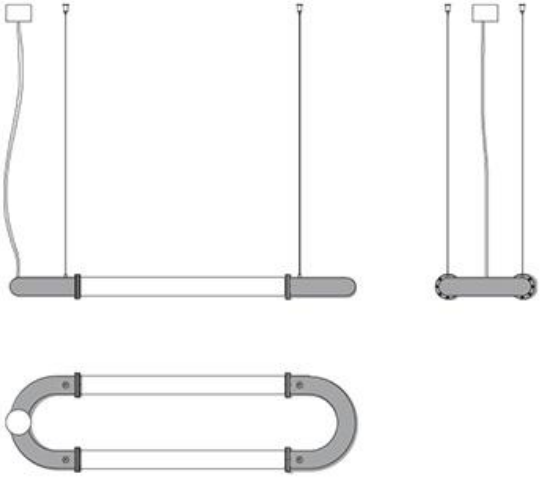

Dimensions

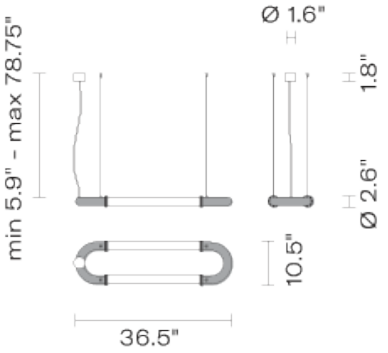

Material

Blown glass, aluminum

Color

Gold

Other colors available

Check online www.fabbian.us

Included accessories

LED

Not included accessories

Remote dimmable electronic driver

Weight Lamp

9.9 lbs

Options

2400K, 3500K, and 4000K

Description

Linear link-shaped pendants with blown glass diffusers and anodized aluminum finish. Provides direct and indirect ambient illumination.

Voltage	Dimmable
24V	Based on selected driver

Specs

Light source and Technical

Lamp type: 28W LED
Wattage: 28W
Color temperature: 3000K
CRI: 90+
Lumens: 2100lm

Pictures, descriptions, dimensions and technical data have to be considered as purely indicative. While maintaining the basic characteristics of the product, the manufacturer reserves the right to make modifications at any time with the sole aim of improvement.