:FABBIAN

# Santo F74

## F74A31A01

*Atelier Biagetti*

Fixture type

Project name

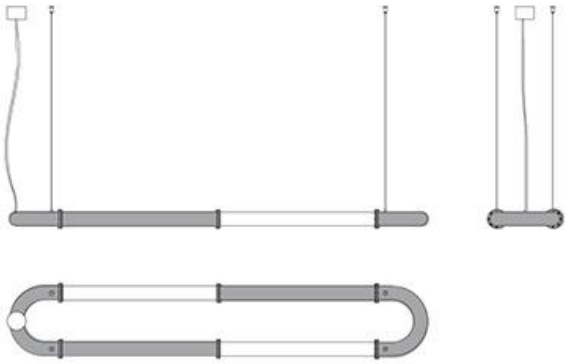

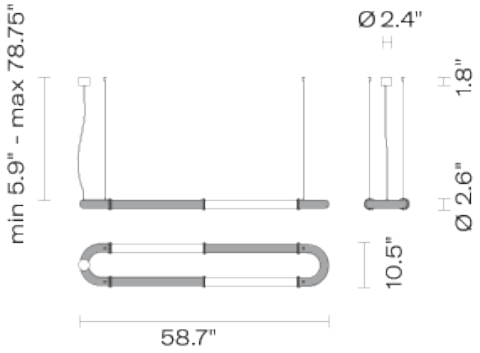


### Dimensions

### Material

Blown glass, aluminum

### Color

White

### Other colors available

Check online www.fabbian.us

### Included accessories

LED

### Not included accessories

Remote dimmable electronic driver

### Weight Lamp

14.8 lbs

### Options

2400K, 3500K, and 4000K

### Description

Linear link-shaped pendants with two blown glass diffusers and painted aluminum finish. Provides direct and indirect ambient illumination.

| Voltage | Dimmable |
|---|---|
| 24V | Based on selected driver |

### Specs

### Light source and Technical

**Lamp type**: 28W LED
**Wattage**: 28W
**Color temperature**: 3000K
**CRI**: 90+
**Lumens**: 2100lm

Fabbian Usa Corp. | 307 W 38th St Ste 1103, New York, NY 10018 (USA) | ph. +1 646 518 4160 | fax +1 646 518 4180 | www.fabbian.us | usa@fabbian.com canada@fabbian.com
Pictures, descriptions, dimensions and technical data have to be considered as purely indicative. While maintaining the basic characteristics of the product, the manufacturer reserves the right to make modifications at any time with the sole aim of improvement.