:FABBIAN

Faretti D27

D27F43IC00

Pamio Design

Fixture type

Project name



Dimensions

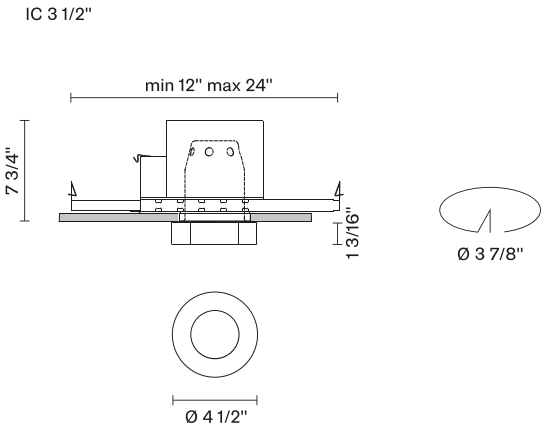

Material

Crystal glass

Color

Clear

Other colors available

Check online www.fabbian.us

Included accessories

LED, Driver

Options

0-10V dimming
2400K, 2700K, 3500K, 4000K
2000 Lumen Module
277V
Safety cable model D27-SC for seismic needs

Description

The Faretti Lei semi-recessed spotlight has a classic and functional Round shape. Its diffuser comes in transparent crystal, which is frosted internally. Integral LED lamping. IC Rated Housing. Suitable for residential, corporate, hospitality, and retail applications.

Voltage	Dimmable
120V	ELV

Specs

T24

Light source and Technical

Lamp type: LED
Wattage: 16W
Color temperature: 3000K
CRI: 93
Lumens: 1000lm

Pictures, descriptions, dimensions and technical data have to be considered as purely indicative. While maintaining the basic characteristics of the product, the manufacturer reserves the right to make modifications at any time with the sole aim of improvement.

:FABBIAN

Faretti
D27 LED Housings

Project Reference

Fixture Type

Selected Product Model



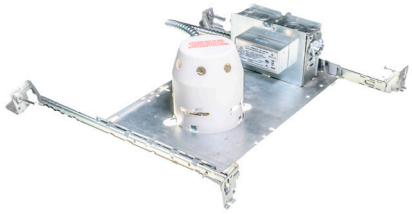

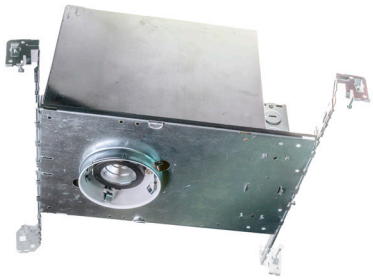

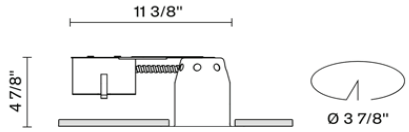

RM LED
Integral LED Remodel Applications

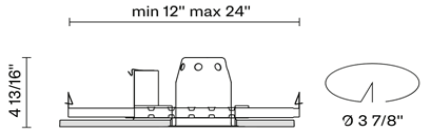

NC LED
Integral LED for New Construction

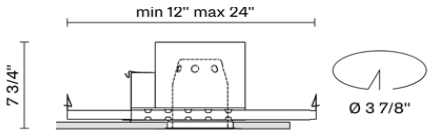

IC LED
Integral LED, Insulated Ceiling Contact

Description

After intense research on shapes in spaces, Pamio Design Studio succeeded in creating a wide range of recessed lighting fixtures that are both functional and exquisite. The shapes, facets, materials, and finishes were conceived to produce the best lighting possible while adding a touch of elegance to the usual recessed spotlights making the space less technical and cold.

The result is the D27 Faretti series, a range of “small gems of light”, that enhance the ceiling in any space, creating elegant, unique atmospheres. Recessed lighting fixtures are for indoor use with housings available for Remodel, New Construction, and Insulated Ceilings. Match with Crystal and Glass Trims in both transparent or satin finishes, and some with stainless steel front plates.

Trims are available for DRY (open glass) or DAMP (closed glass) applications.

Optical assembly

- Bridgelux BXRC-30E2000-C-23 Remote Phosphor LED Module
  40 Degree Optical Assembly with Integral Heatsink
- >93+ CRI
- Field Accessible and Replaceable

Product performances

- LED 500mA
- 1x16W - 40°
- WHITE 3000K, 93+CRI
- 1000 Source lumens

Hm	BEAM (ft)	FC
8’	5.8	41
10’	7.2	26
12’	8.6	18
14’	10.1	14

Weight

5.51 lb

Electrical & dimming

- 120V Only
- Dimmable to 10% with ELV Dimmer

Mechanical

Remodel Housing:
- Housing is designed for Remodel installations up to 5/8” thick ceilings and not for contact with insulation
- (4) Clips are used to lock fixture into place
- Multiple knockouts located on (4) sides of the driver box for easier installation access

New Construction (NC) and Insulated Ceiling (IC) Housings:
- Trim on housing is preset for ½” drywall and field adjustable to work with up to 2.5” ceiling thickness
- Hanger Bars adjustable from 13” to 25” for joist and grid ceiling installations
- Pre-attached nails included on hanger bars
- Housing is designed for New Construction installations
  NC- Not for contact with insulation
  IC - For direct insulation contact

Product options (Minimum order quantities may apply)

Driver
- D27F-MOD-DRVR-277V-ELV - 277V Only , ELV Dimming
- D27F-MOD-DRVR-UNV-010V - 0-10V dimming (NC and IC only)
- D27F-MOD-ELDOLED - HO Driver 0.1%Dimming. Programmable for 1000 or 1918 lumens (NC and IC (low output only) only)

Safety Clip
- D27-SC - 12" Safety cable with safety clamp for Faretti Glass

CCT
- D27F-MOD-2400K - 2400K, 93CRI
- D27F-MOD-2700K - 2700K, 93CRI
- D27F-MOD-3500K - 3500K, 93CRI
- D27F-MOD-4000K - 4000K, 93CRI

High Output
- D27F-MOD-HI-OUTPUT - 1918 Initial Lumens, 93CRI. (NC Only)

Listing & Warranties

ETL Listed to UL 1578 Standard

Intertek LED DIMMABLE ELECTRONIC DRIVER T24

* Options listed are available with extended lead times; minimum order quantities may apply

Pictures, descriptions, dimensions and technical data have to be considered as purely indicative. While maintaining the basic characteristics of the product, the manufacturer reserves the right to make modifications at any time with the sole aim of improvement.

Pictures, descriptions, dimensions and technical data have to be considered as purely indicative. While maintaining the basic characteristics of the product, the manufacturer reserves the right to make modifications at any time with the sole aim of improvement.