:FABBIAN

Faretti D27

D27F09RM00

Pamio Design

Fixture type

Project name



Dimensions

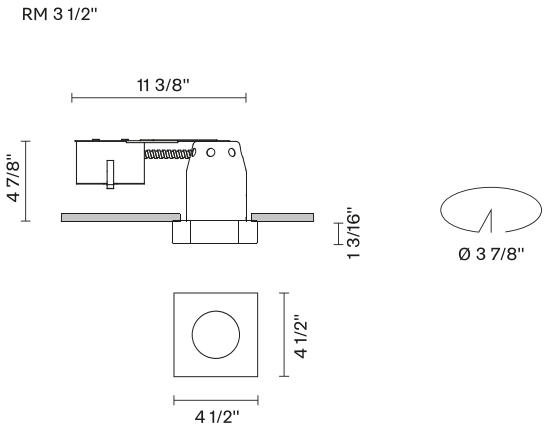

Material

Crystal glass

Color

Clear

Other colors available

Check online www.fabbian.us

Not included accessories

GU10 Lamp

Description

The Faretti Lui semi-recessed spotlight has a classic and functional square shape. Its diffuser comes in transparent crystal, which is frosted internally. GU10-based lamping. Remodel Housing. Suitable for residential, corporate, hospitality, and retail applications.

Voltage	Dimmable
120V	TRIAC

Specs

Light source and Technical

Lamp type: GU10 15W LED
Wattage: 15W MAX LED

Pictures, descriptions, dimensions and technical data have to be considered as purely indicative. While maintaining the basic characteristics of the product, the manufacturer reserves the right to make modifications at any time with the sole aim of improvement.