:FABBIAN

# Faretti D27

## D27F11RM35

*Pamio Design*

Fixture type

Project name



### Dimensions

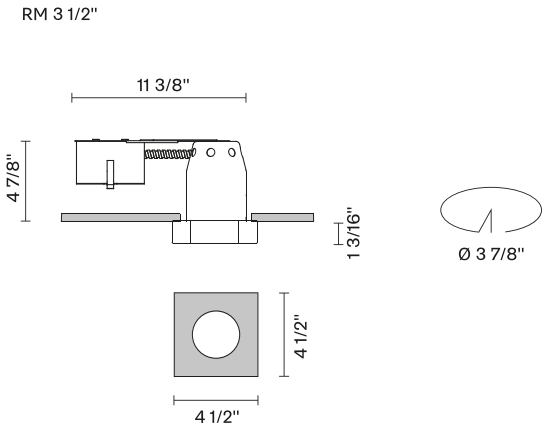


### Material

Crystal glass - Stainless steel

### Color

Polished Stainless Steel

### Other colors available

Check online www.fabbian.us

### Not included accessories

GU10 Lamp

### Description

The Faretti Lui semi-recessed spotlight has a classic and functional square shape. Its diffuser comes in transparent crystal with a polished metal plate. GU10-based lamping. Remodel Housing. Suitable for residential, corporate, hospitality, and retail applications.

| Voltage | Dimmable |
|---|---|
| 120V | TRIAC |

### Specs

### Light source and Technical

**Lamp type**: GU10 15W LED
**Wattage**: 15W MAX LED


Pictures, descriptions, dimensions and technical data have to be considered as purely indicative. While maintaining the basic characteristics of the product, the manufacturer reserves the right to make modifications at any time with the sole aim of improvement.