:FABBIAN

Freeline F44

A55209

Fixture type

Project name

Material

Electronic Driver

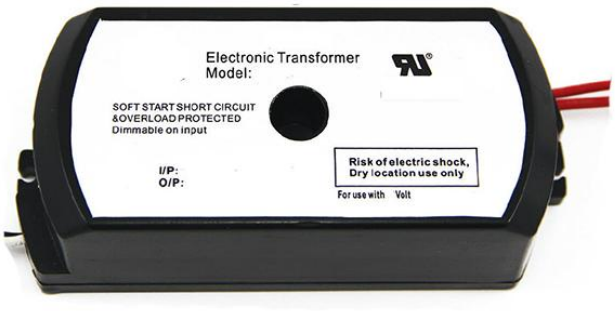

Description

96W, 24V, 120V, ELV Dimming

Dimmable

ELV

Light source and Technical

Lamp type: LED Driver

Pictures, descriptions, dimensions and technical data have to be considered as purely indicative. While maintaining the basic characteristics of the product, the manufacturer reserves the right to make modifications at any time with the sole aim of improvement.

Fabbian

Low Voltage Electronic Transformer

Model A55209

96W 24V DC

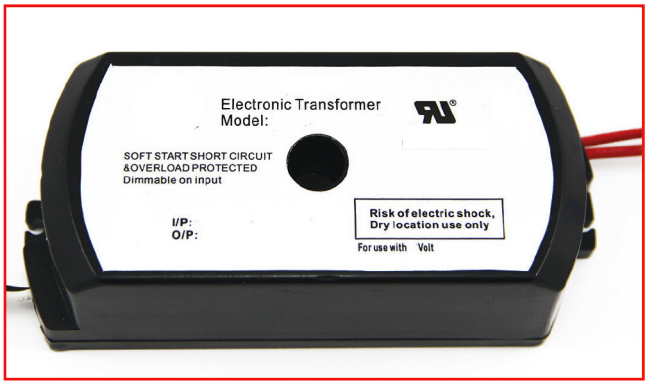

Efficiency	higher than 85%
Power Factor	>98%
Case TC*	90C° Max.
Protection	Input / Output
Storage	-30°C / +90°C
Humidity	95% RH Max.
IP Rating	IP 60
Dimming	ELV Dimmable
Class	Class 2

3 5* Year Warranty

FEATURES

- No load technology, works with both Halogen & LED AC loads **
- Isolated output power per NEC and UL safety requirements
- UL recognized Class 2 power supply meet UL 2108 requirements
- Auto-reset; Short circuit, Overload and Thermal protection
- Soft start
- Dimmable
- Low profile, small compact design to fit in most enclosures

ELECTRICAL SPECIFICATIONS

120V					
Model #	**Input Voltage**	**Input Current**	**Output Voltage**	**Weight**	**Load Type**
A55209	120V AC 50/60Hz	0.8A	24V DC	240g	LED Strips, LED Bulbs, Incandescent & Halogen Bulbs

MECHANICAL SPECS.

STANDARD

DC - E6 4.75"x2.2"x1.5"

Available Form Factors	**Dimensions**
Standard DC "E6"	4.75" x 2.2" x 1.5"

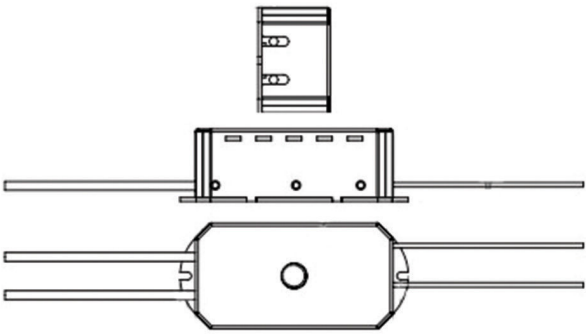

WIRE DERATING GUIDE FOR 24V FOR DISTANCE TO DRIVER

Gauge	**Distance**
18AWG	25 feet
16AWG	40 feet
14AWG	60 feet
12AWG	100 feet
10AWG	150 feet

* Under confirmed thermal condition